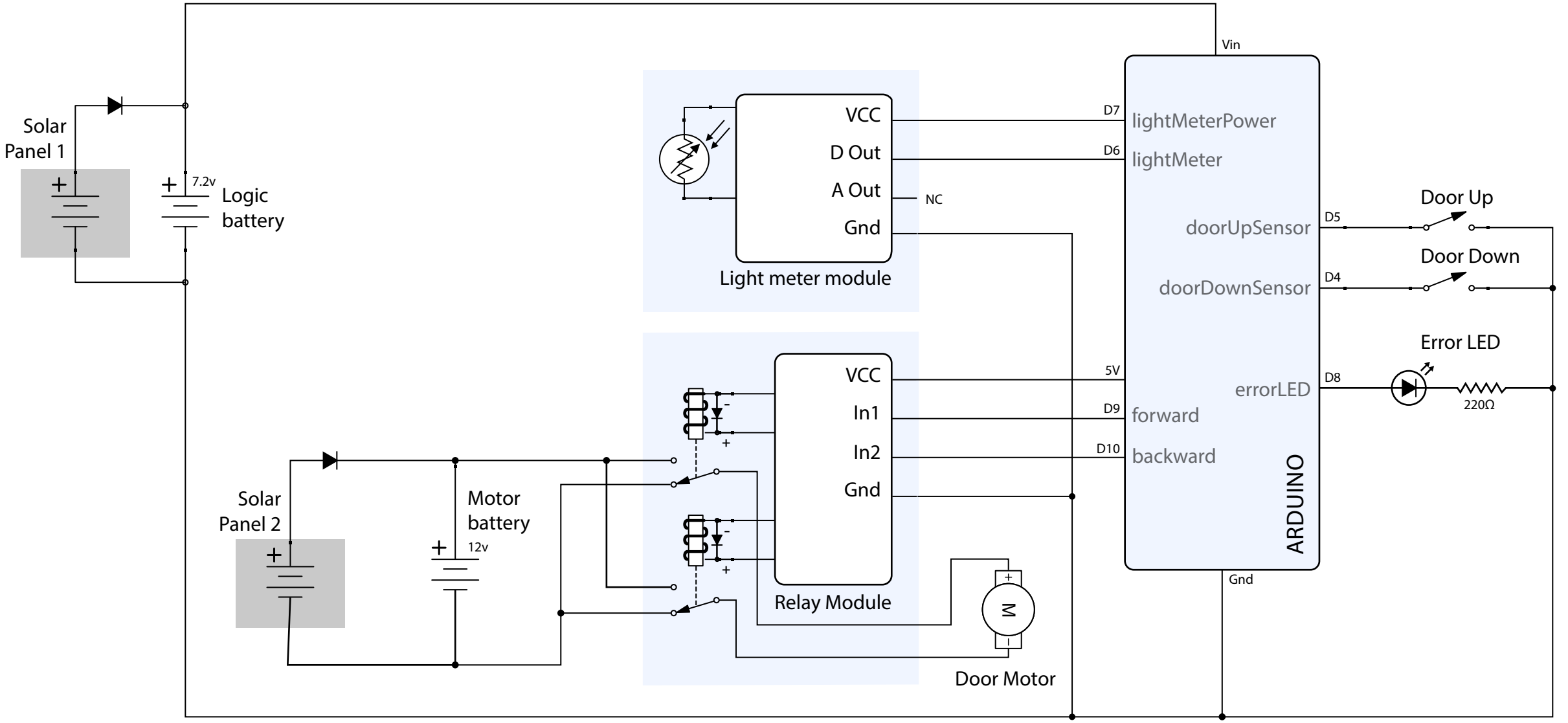

http://blob.pureandapplied.com.au/chookrobot/

Chook Robot V1.3